ภาคผนวก 2-5

การทำงานของระบบ Sulfide Oxidation

DWG. NO A1-0603.02-6100-302

R-6101 WET AIR OXIDATION REACTOR NO. 1 SIZE : 1300 mmID x 11200 mmT/T
S-6102 WAO NO.1 CAUSTIC EFFLUENT FILTER
S-6103 WAO NO.2 CAUSTIC EFFLUENT FILTER
R-6102 WET AIR OXIDATION REACTOR NO. 2 SIZE : 1300 mmID x 11200 mmT/T
V-6102 DEPLETED AIR-WATER K.O. DRUM SIZE : 1300 mmID x 3400 mmT/T
V-6101 WAO SPENT CAUSTIC FLASH DRUM SIZE : 900 mmID x 2600 mm T/T
M-6101 DEPLETED AIR-WATER CONTACTOR
E-6102 WAO WASH CIRCULATING COOLER DUTY : 180KW
E-6103 OXIDATE COOLER DUTY : 201KW

A-6101 AIR BOOSTER COMPRESSOR PACKAGE
E-6101 WAO FEED HEATER DUTY : 200KW
S-6101 WAO STEAM FILTER
M-6100 MPS DESUPERHEATER
S-6104 WAO AIR FILTER

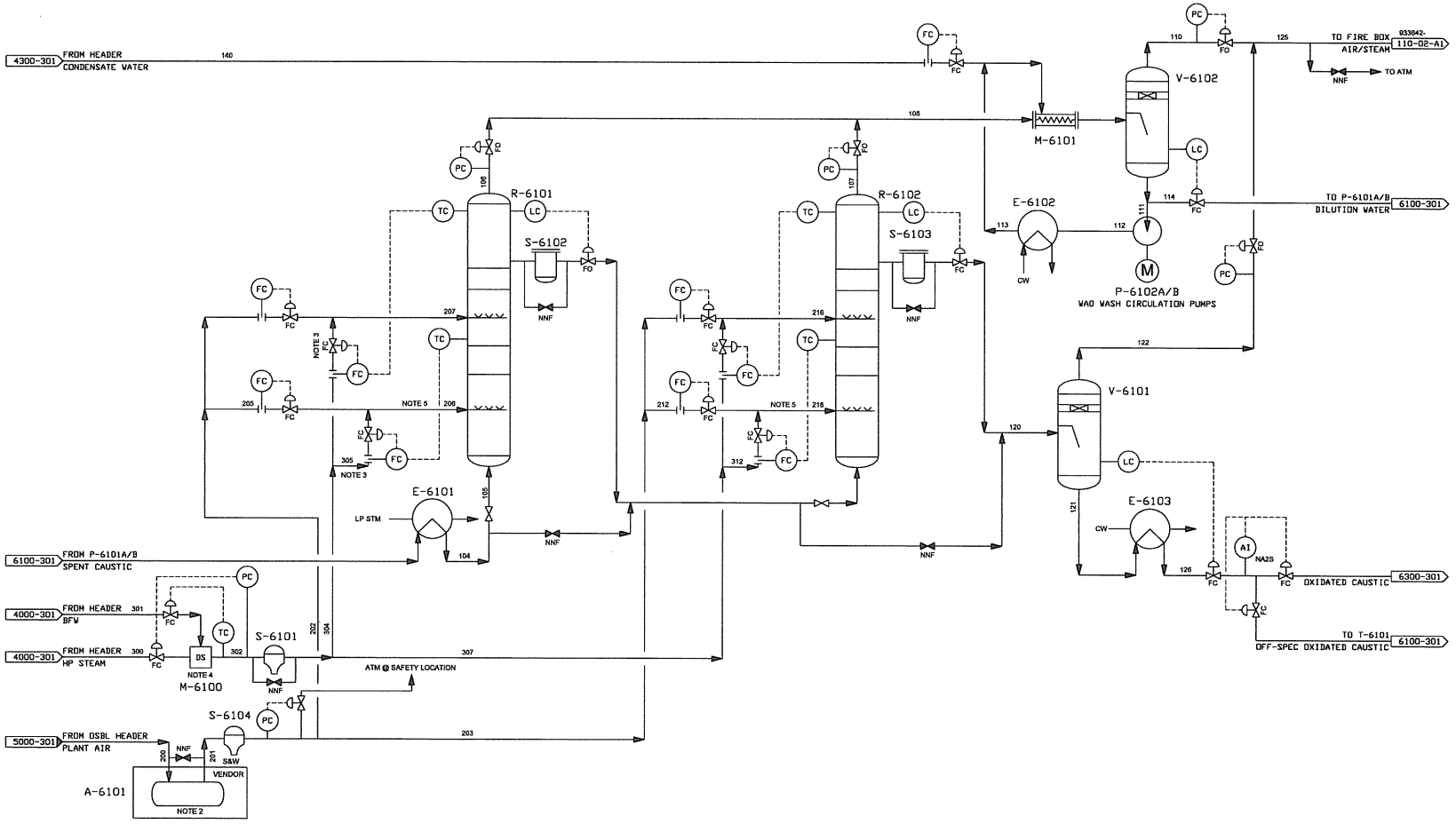

NOTES :

1. FOR LEGENDS AND SYMBOLS SEE DWG. A1-0502.41-0000-001 THRU 004.
2. AIR BOOSTER COMPRESSOR PACKAGE UNIT TO BE PROVIDED BY VENDOR.
3. NORMALLY NO FLOW LINE. USE STREAM NO.312 FLOW RATE & CONDITONS FOR LINE SIZE.
4. HP STEAM DESUPERHEATER.
5. REFER TO HEAT & MATERIAL BALANCE (DOC. PS-A-0603.02-6100-004) FOR DETAILED STREAM PROPERTIES.

STREAM DATA SUMMARY
300,000 MTA PROPYLENE PRODUCTION

STREAM NUMBER		104	105	106	107	108	110	111	112	113	114	120	121	122	125	126	140
TEMPERATURE	DEG C	132.0	132.0	153.0	150.0	145.9	95.0	95.0	95.1	48.0	95.0	131.0	130.1	131.0	98.2	45.0	50.0
PRESSURE	kg/cm²g	13.3	11.3	10.1	7.8	2.8	2.0	2.0	5.5	3.7	2.0	1.8	1.8	18	0.5	1.1	11.0
WEIGHT FLOW	kg/hr	2450	2450	1207	712	1920	1613	3252	3252	3252	1284	2123	2043	80	1639	2043	977
ENTHALPY	mw	0.380	0.380	0.334	0.185	0.518	0.256	0.359	0.360	0.182	0.142	0.370	0.310	0.080	0.316	0.106	0.057

STREAM DATA SUMMARY
300,000 MTA PROPYLENE PRODUCTION

STREAM NUMBER		200	201	202	203	205	206	207	212	216	218	300	301	302	304	305	307	312
TEMPERATURE	DEG C	30.0	90.3	90.2	90.2	90.2	89.9	89.8	90.2	143.4	149.5	400.0	130.0	233.9	233.0	233.0	233.0	233.0
PRESSURE	kg/cm²g	7.0	14.0	13.5	13.5	13.5	11.1	10.7	13.5	8.4	8.9	39.0	49.0	14.5	14.0	14.0	14.0	14.0
WEIGHT FLOW	kg/hr	1380	1380	880	500	250	250	630	250	347	365	186	26	212	0	0	212	97
ENTHALPY	mw	0.012	0.035	0.022	0.013	0.006	0.006	0.016	0.006	0.084	0.098	0.166	0.004	0.170	0.000	0.000	0.170	0.078

REV.	DESCRIPTION	BY	CHK.	APPR.	PRELI APPR.	DATE
1	FOR FILING	WSC	TYC	KLH	Jorten	Oct.22/'09
0	FOR FILING	WSC	TYC	KLH	Jorten	NOV.3/'08
C	ISSUED FOR PDP-IFD	GAD	MW	SAK	BE	JAN.10/'07
B	ISSUED FOR REVIEW	RAW	MW	SAK	BE	NOV.29/'06
A	ISSUED FOR REVIEW	RAW	MW	SAK	BE	NOV.20/'06

CLIENT: HMC Polymers Co.,Ltd.

CTCI Overseas Corp., Ltd.

Stone & Webster International, Inc.

FOR: PROPANE DEHYDROGENATION PROJECT

TITLE: UTILITY FLOW DIAGRAM
SULFIDIC CAUSTIC TREATMENT SYSTEM
WET AIR OXIDATION SYSTEM (UNIT 6100)
OFF-SITES AND UTILITY FACILITIES

CERTIFIED FOR CONSTRUCTION		DWG.	DSGN.	CHK.	APPR.
BY	BY				
DATE	DATE				

HMC PROJECT NO.	HMC-002/06	LOCATION CODE	A057
HMC DRAWING NO.	A1-0603.02-6100-302	REV.	
CTCI PROJECT NO.	06E1179		1
CTCI DRAWING NO.	XB12A-6100-302		